AVDASI 3
(CADE 30007)
Gas Turbine Propulsion

Week 21: Lecture 8

Combustors

Lecturer:

Dr Daniele Zagaglia

daniele.zagaglia@bristol.ac.uk

Unit Director:

Dr. Samudra Dasgupta

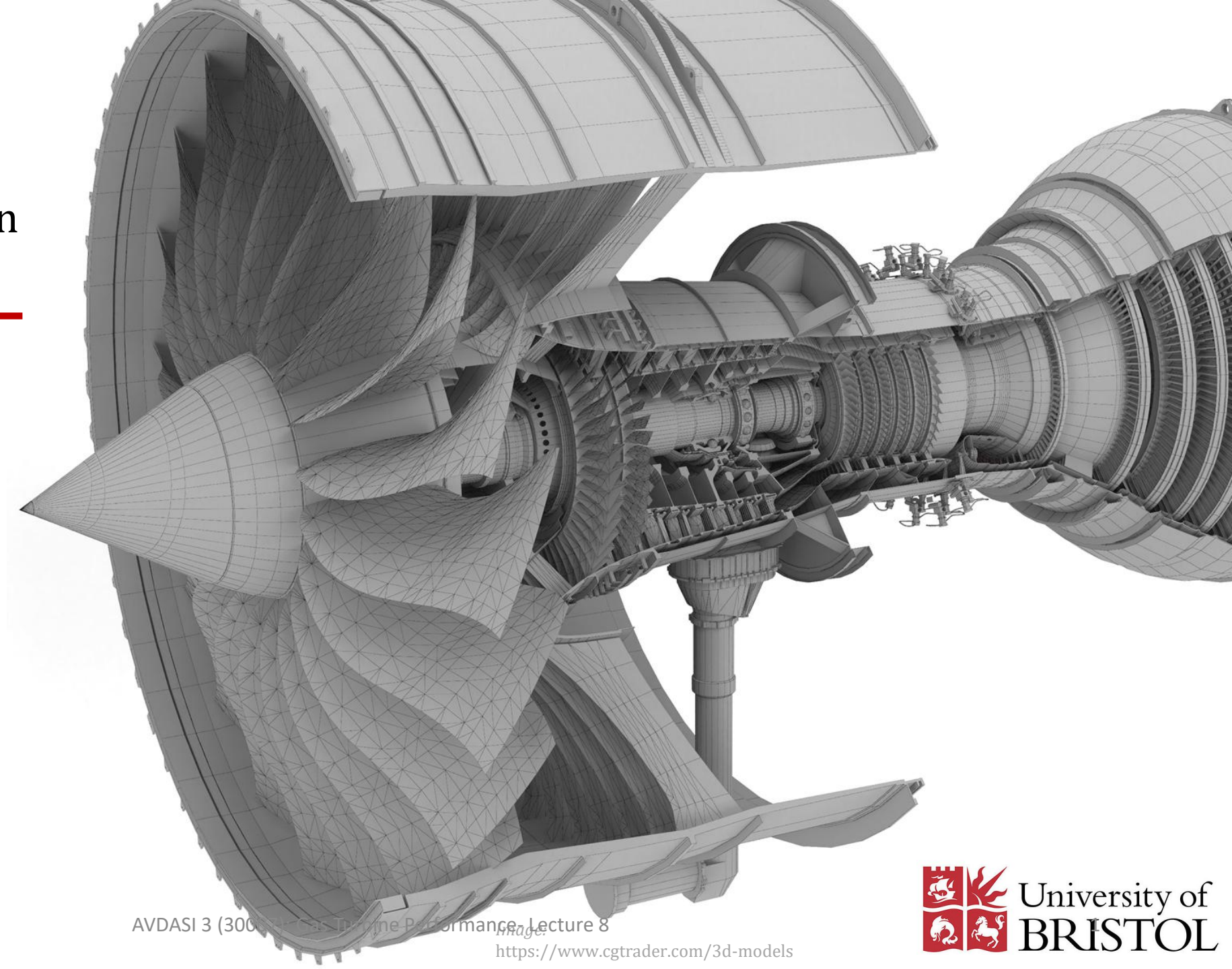

Image: https://www.cgtrader.com/3d-models

University of BRISTOL

Learning Objectives for Lecture 9

- Objective: to describe the workings of a Combustion System

Combustion

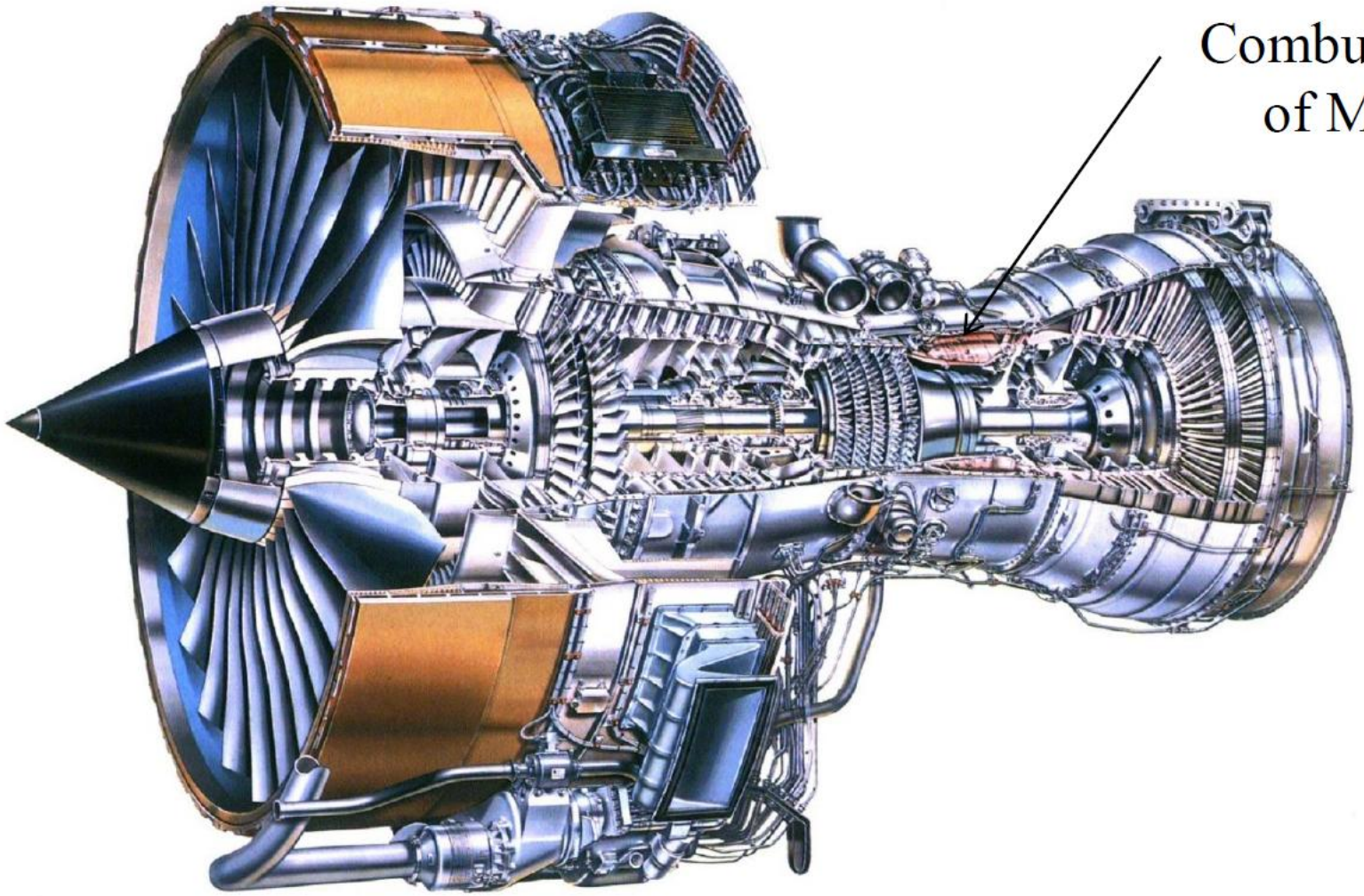

Combustion key issues

- Average temperature rise up to 1000 K;
- Peak gas temperatures 1000K above melting point of walls;
- Energy release at rate of 150 MW enough to:
  - Boil 75000 kettles or
  - Or produce 100,000 Lb of thrust
- Walls glow cheery red
- Must ignite at:
  - - 8 ^{o}C, 0.4 bar for altitude relight
  - - 40 ^{o}C, air & fuel for cold start on ground

Combustion characteristics

Increase temperature of the air in accordance with thermodynamic cycle requirement whilst achieving:

1) High combustion efficiency
2) Low pressure loss
3) Uniform temperature traverse into the HP turbine
4) Stable combustion off-design
5) Easy starting on ground
6) Ability to relight in flight
7) Adequate life
8) Low harmful emissions i.e. smoke/CO/NOx (those that can be controlled by combustor design)
9) Compact and low weight

Fuel Chemistry

University of BRISTOL

Fuel Chemistry

$$\underbrace{C_{12.5}H_{24}}_{\text{Aviation 'Kerosine'}} + 18.5O_2 + 69.6N_2 = 12.5CO_2 + 12H_2O + 69.6N_2 + HEAT$$ + CO/Nox/Smoke Pollutants

Standard Kerosene: $C_{12}H_{24}$

1 kg fuel produces 3.2 kg CO_2 and 1.3 kg H_2O approx.

Fuel heating value varies but typically **43400 kJ/kg**.

Flame speed in a fuel/air mixture at pressure is < 10 m/s.

Emissions

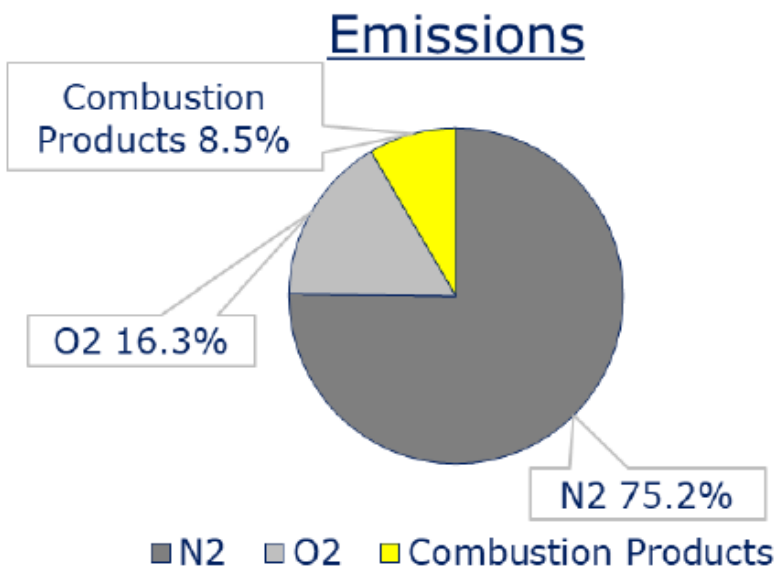

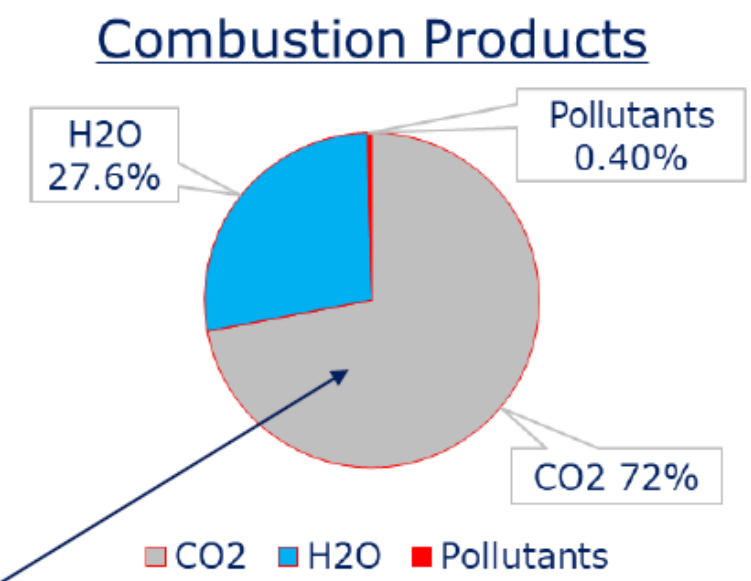

Pollutants can be controlled by combustor design

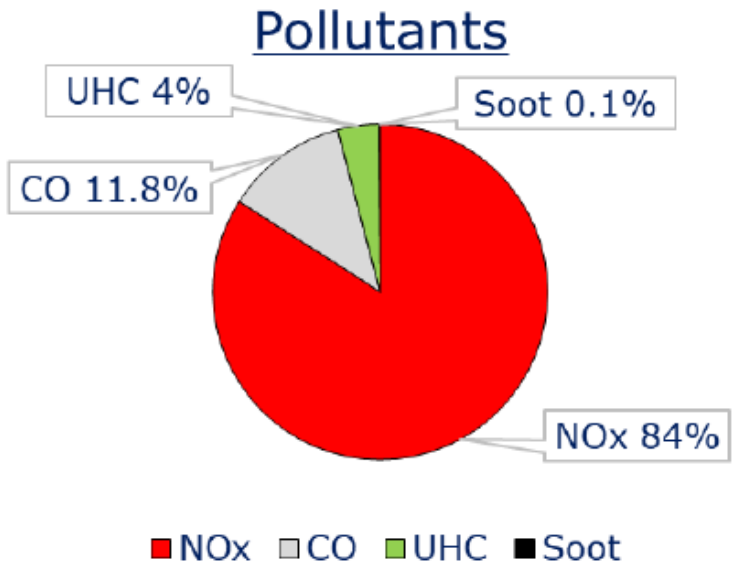

N.B. Aviation responsible for about 2.5% global CO_2 emissions. (global warming)

CO_2 is greenhouse gas - can't be controlled by combustor design but might be controlled by fuel choice e.g. hydrogen

Stochiometric AFR

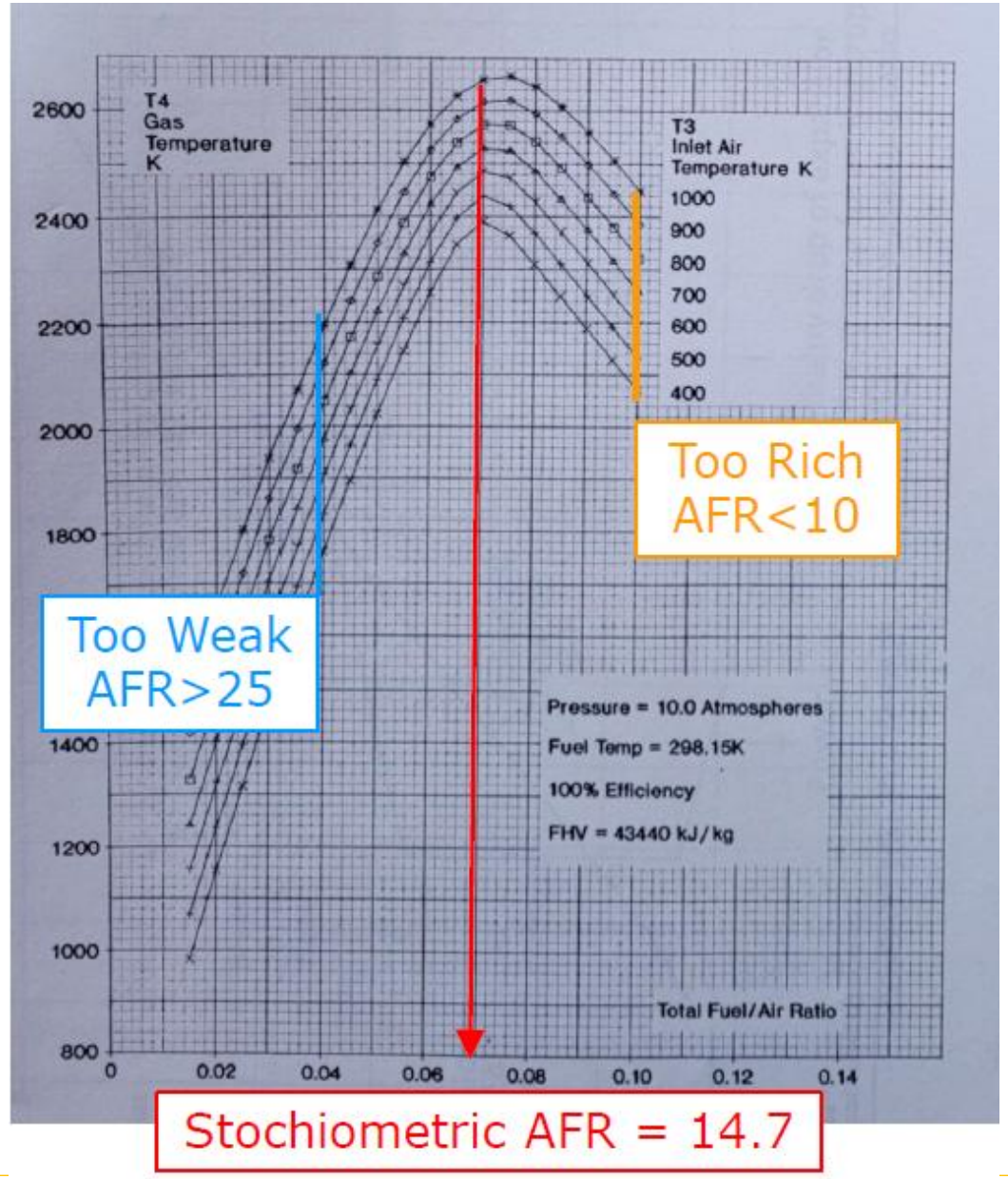

- AFR $= \dot{m}_{air} / \dot{m}_f$
- FAR $= \dot{m}_f / \dot{m}_{air}$

- Beware! Usual <u>overall</u> AFR are around 100:1
- 15:1 is only needed at the point of combustion, most of the flow bypasses the ignition point

Stoichiometric & Disassociation

- The stoichiometric temperature occurs when the fuel & the oxidiser are in the correct proportions such that all fuel & oxidiser are consumed. For air & kerosene this is 2700K but this reduces to 2400K with disassociation.
- Disassociation in gases occurs when the molecules in extreme temperature conditions separate into smaller particles such as atoms etc.
- Ideally the products of combustion are CO_2, H_2O, O_2 & N_2, However at high temperatures these disassociate to minor species e.g. NO, H_2 , CO and others which all contribute to global warming.

How does the combustor do it?

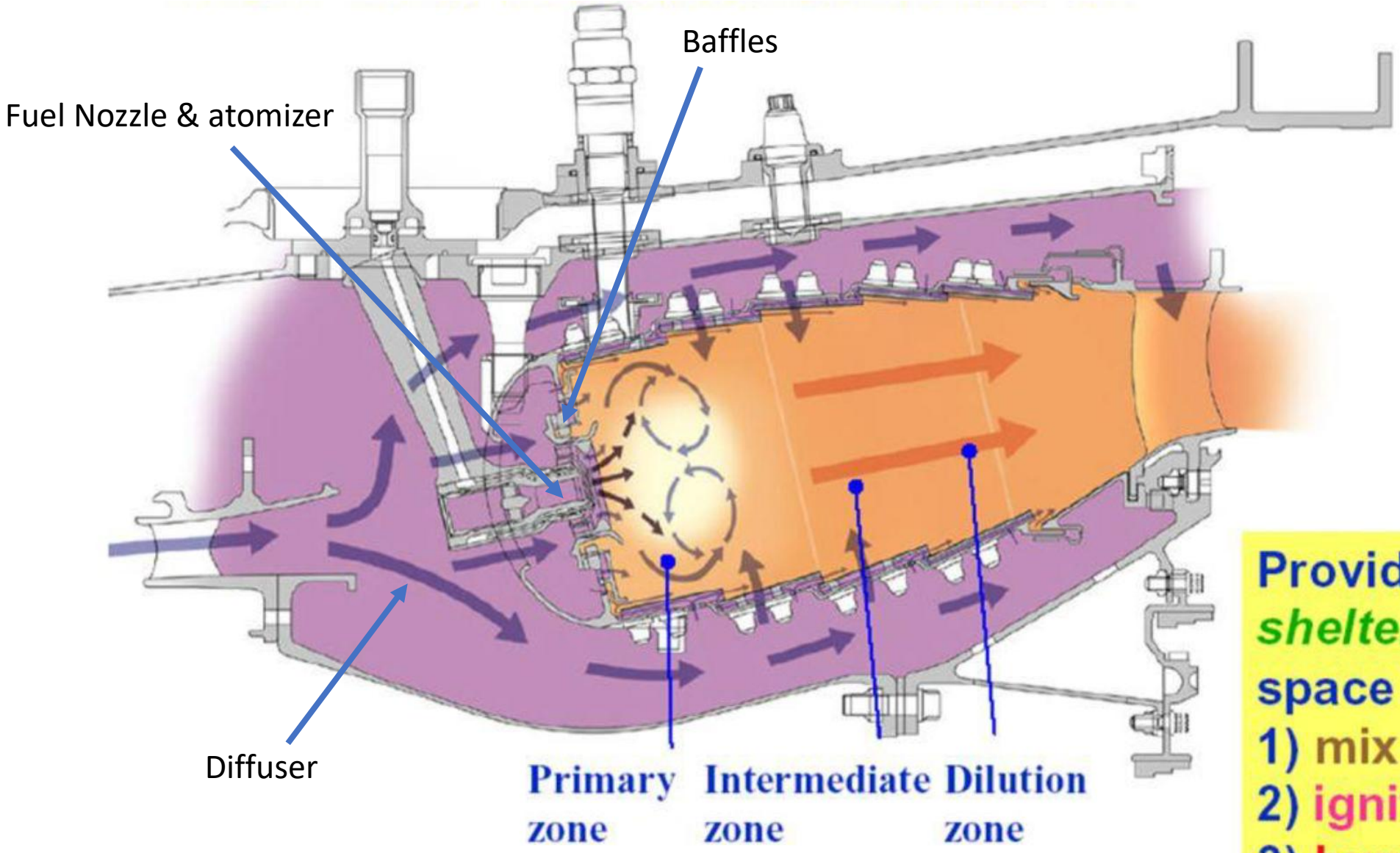

Provides *sheltered* space to
1) mix
2) ignite
3) burn

Combustion System Layout

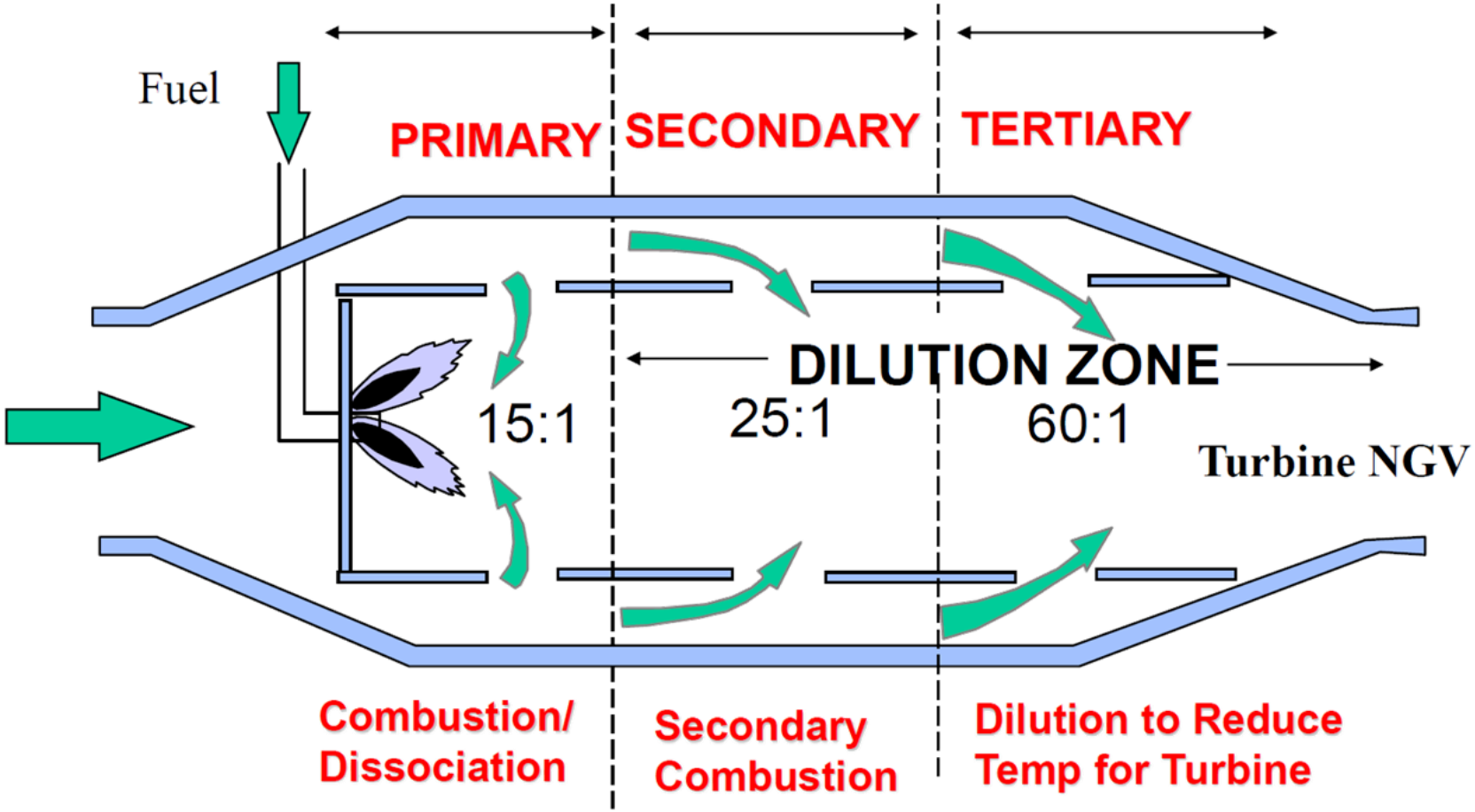

Temp:	800K	2500K	2100K	1800K
Temp Rise:		1700K	1300K	1000K

Types of Combustion System

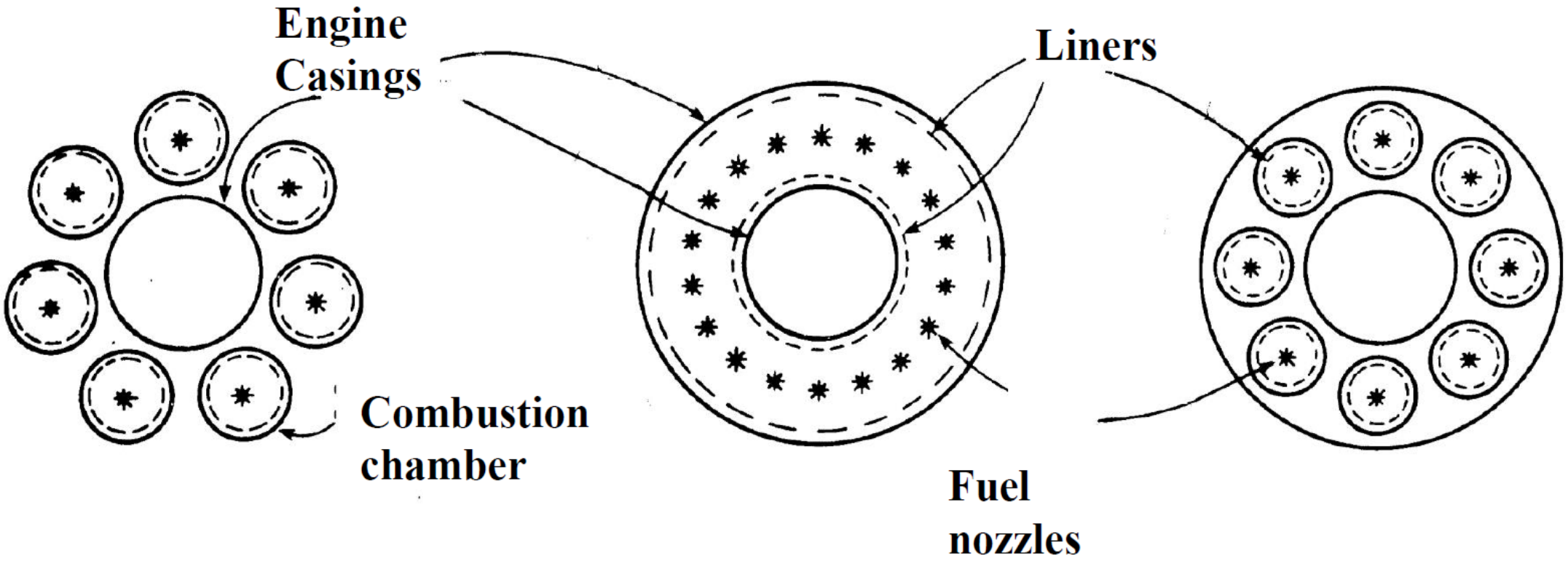

Tubular
Early Design

Annular
Current Design Style

Tubo-annular
Or Cannular

Types of Combustion System

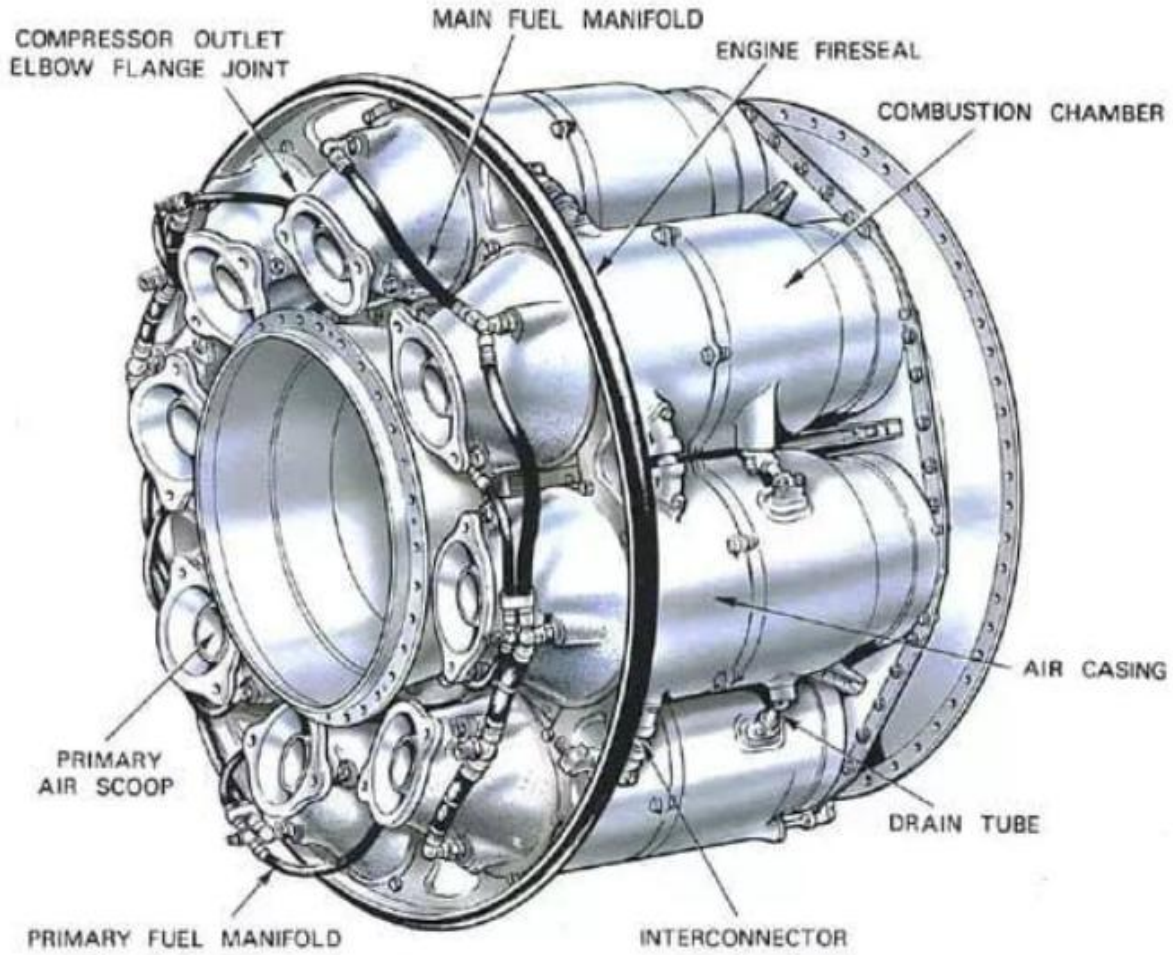

Cannular (old style)

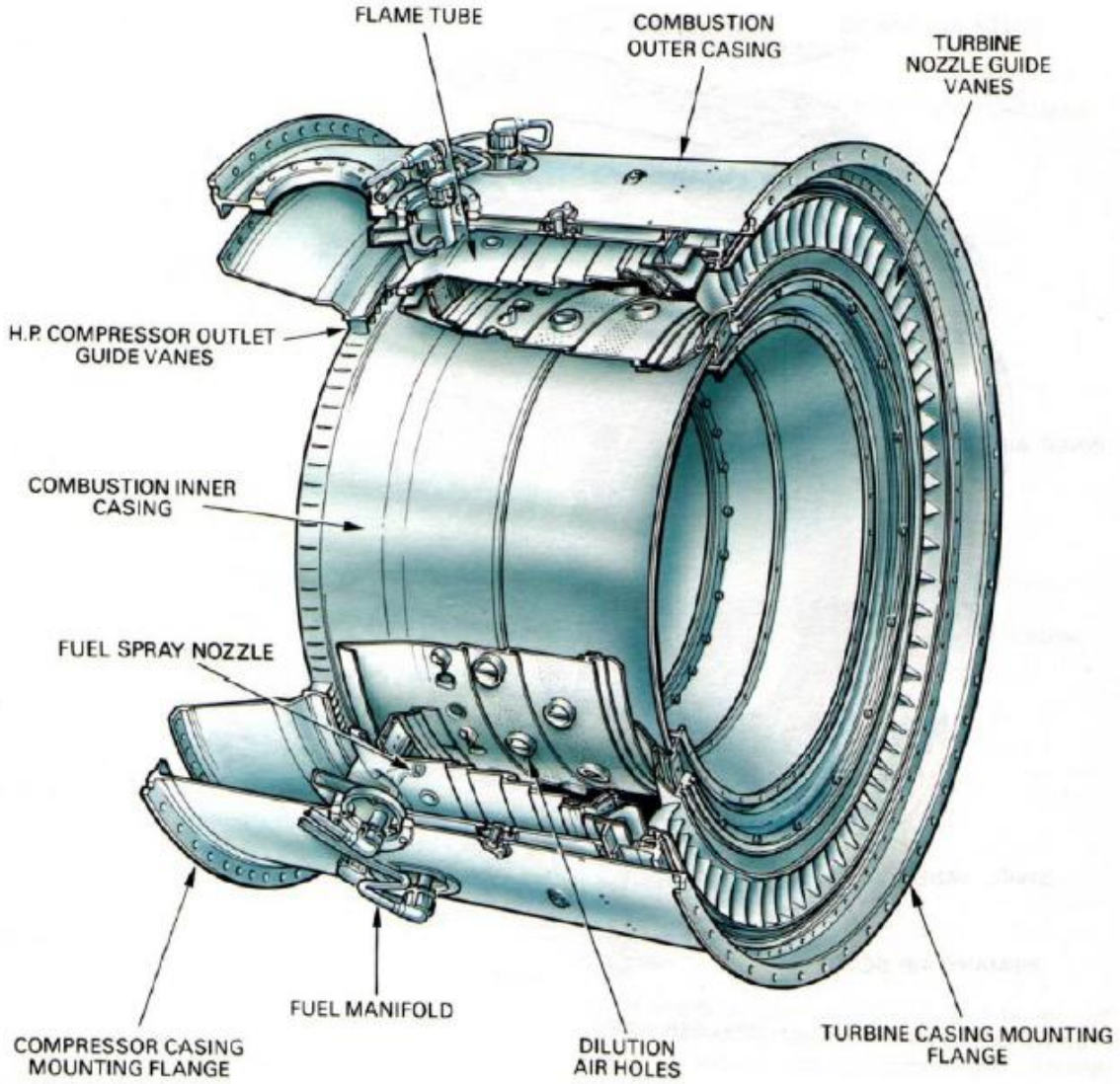

Annular (modern)

Types of Combustion System

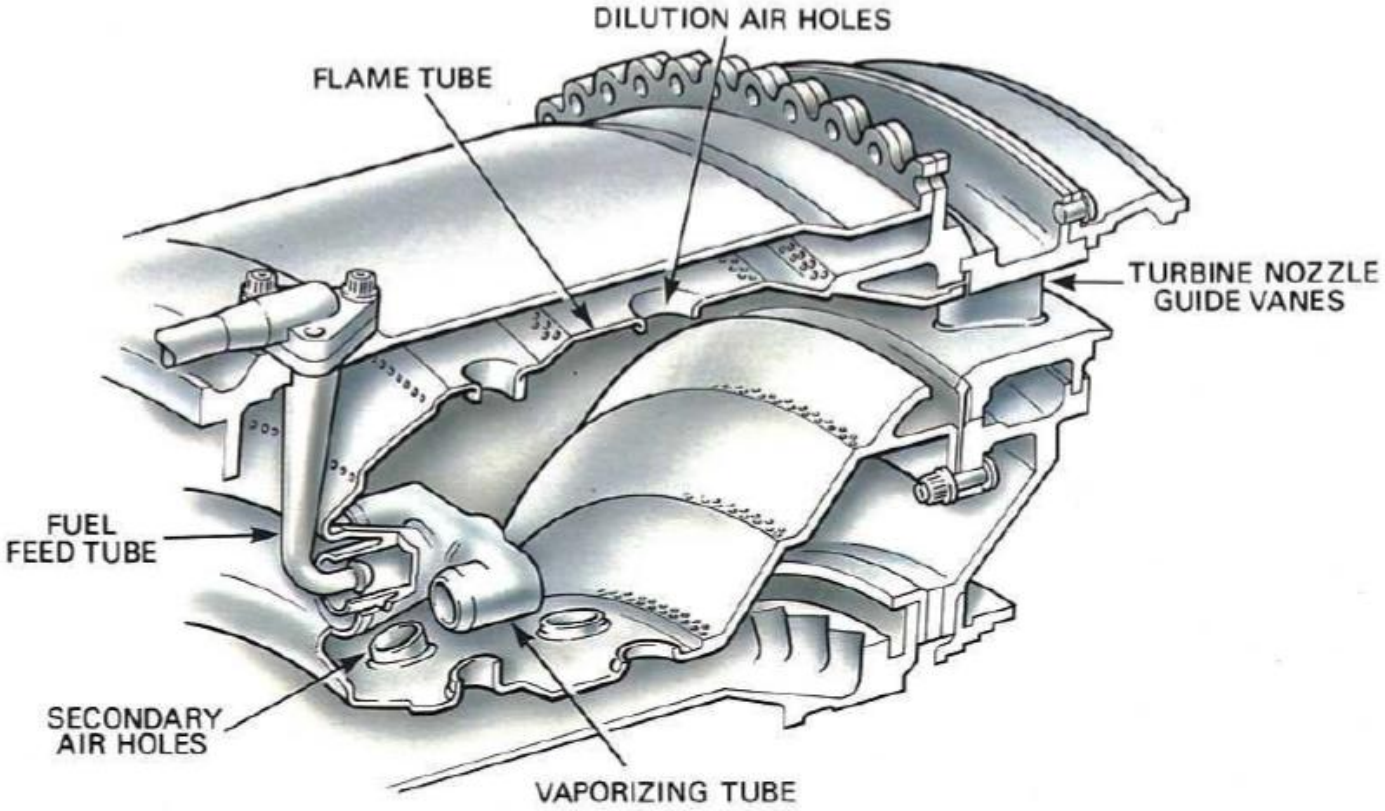

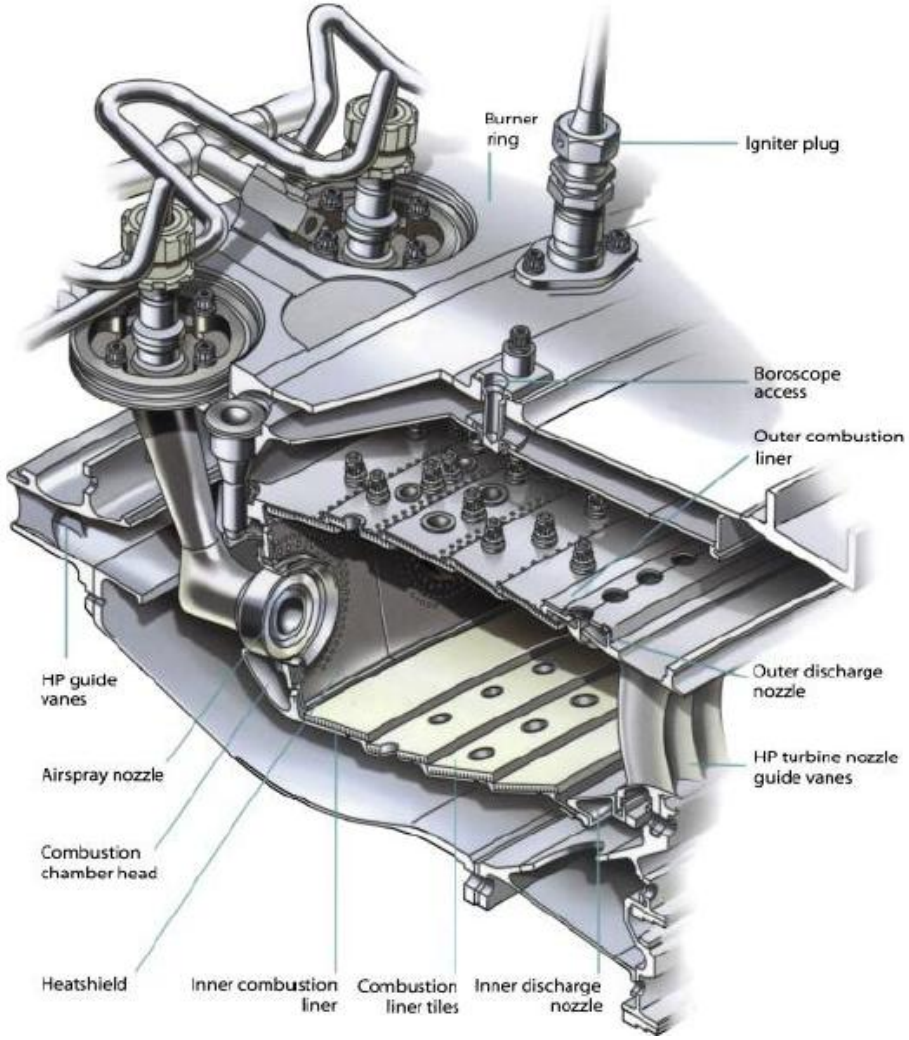

Combustion Chamber Pressure Loss

Caused by:

- **Rise in temperature due to Combustion** — ***Fundamental Loss***
- **Skin friction & Turbulence** — ***Cold Loss***

Pressure Loss Factor (PLF) $= (P_{oA} - P_{oB}) / \frac{1}{2} \rho C_A^2$

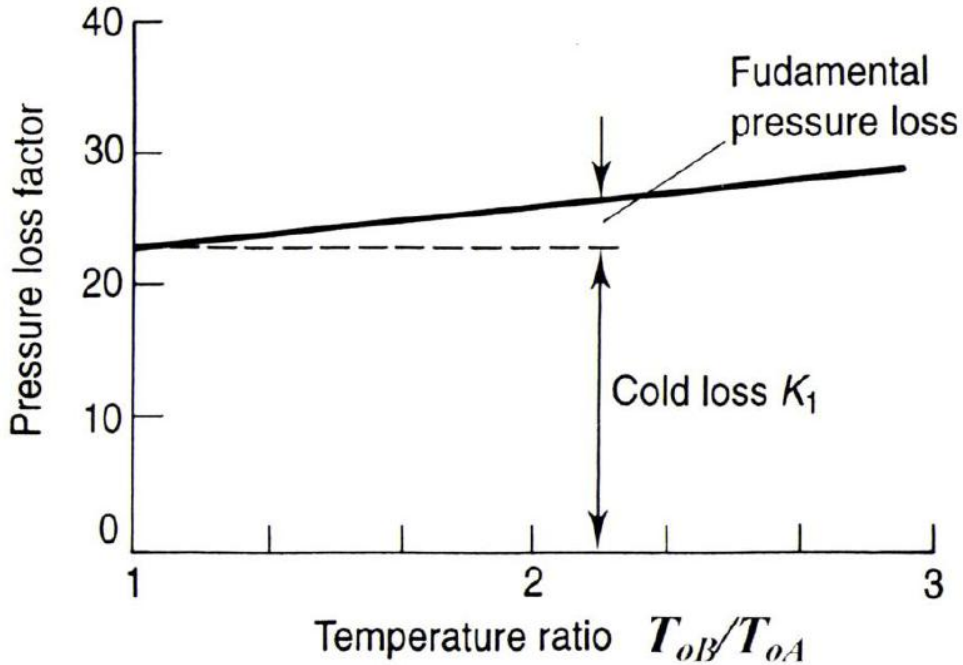

Suffix A refers to Air at inlet to combustion chamber

Suffix B refers to products of combustion at exit from the combustion chamber

Combustion Efficiency

$$\eta_c = \frac{\text{Theoretical Fuel/Air Ratio for actual } \Delta T}{\text{Actual Fuel/Air ratio for actual } \Delta T}$$

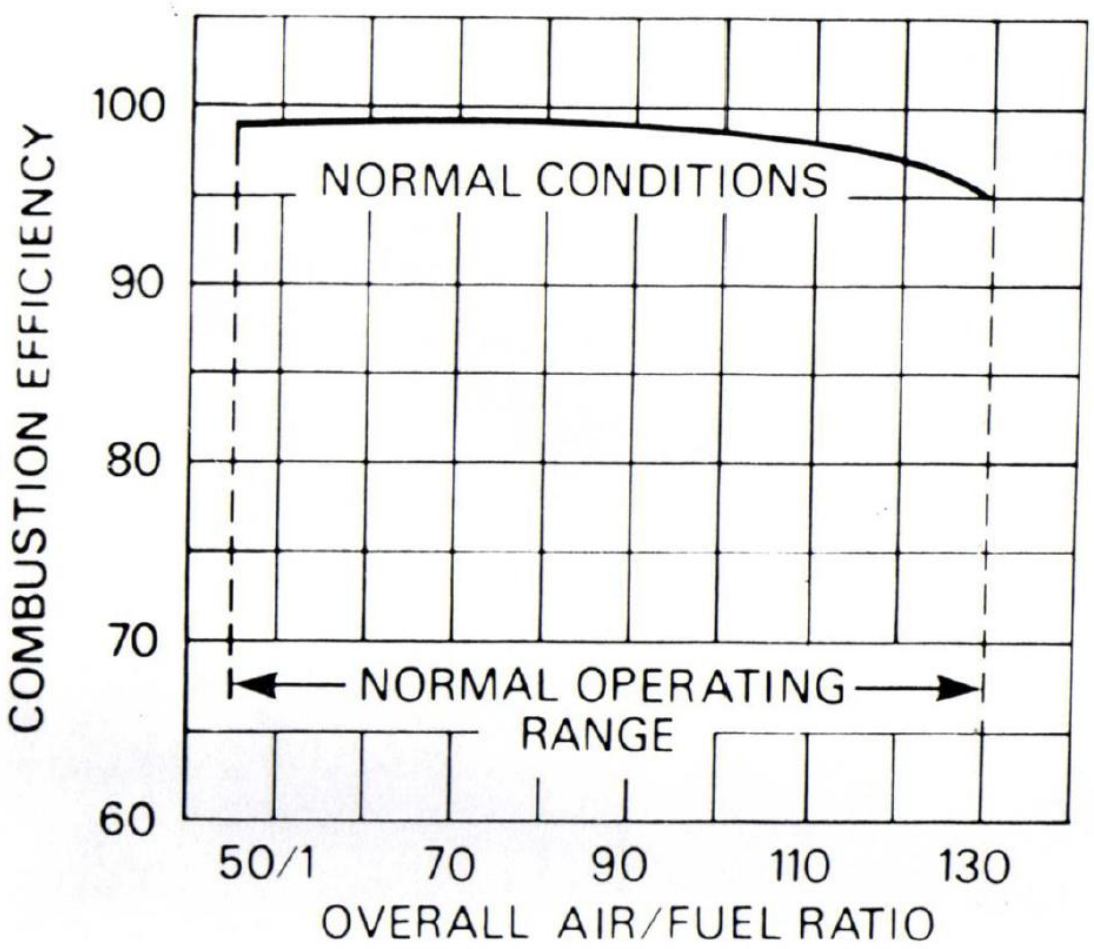

Empirical air loading parameter:

$$ALP = \frac{\dot{m}10^9}{P_{in}^{1.8} e^{T_{in}/300} VOL}$$

Hence large combustor volume and high pressure good for efficiency

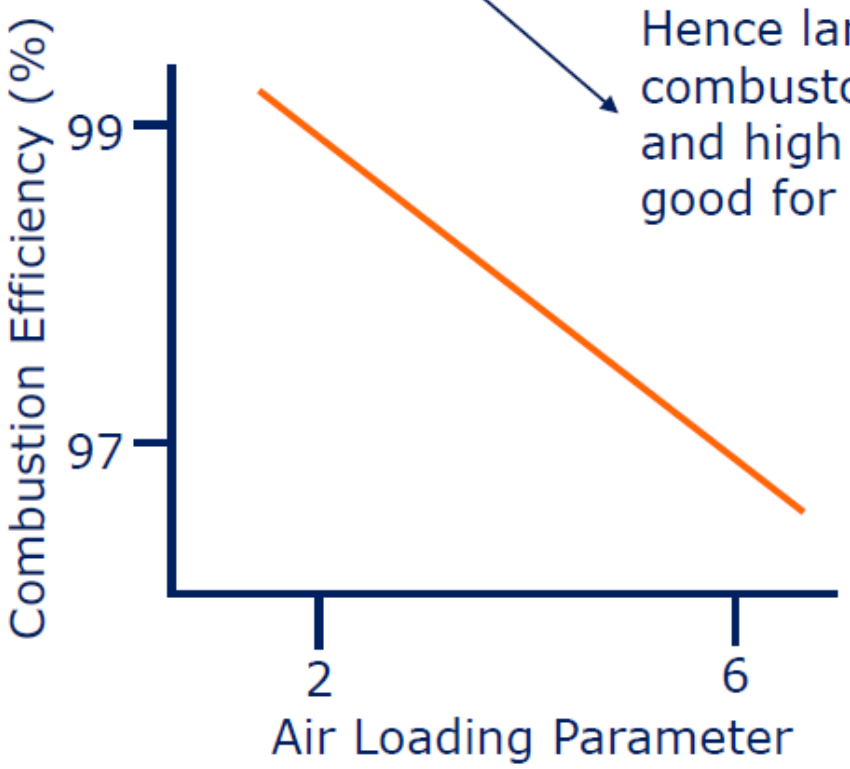

Combustion Stability

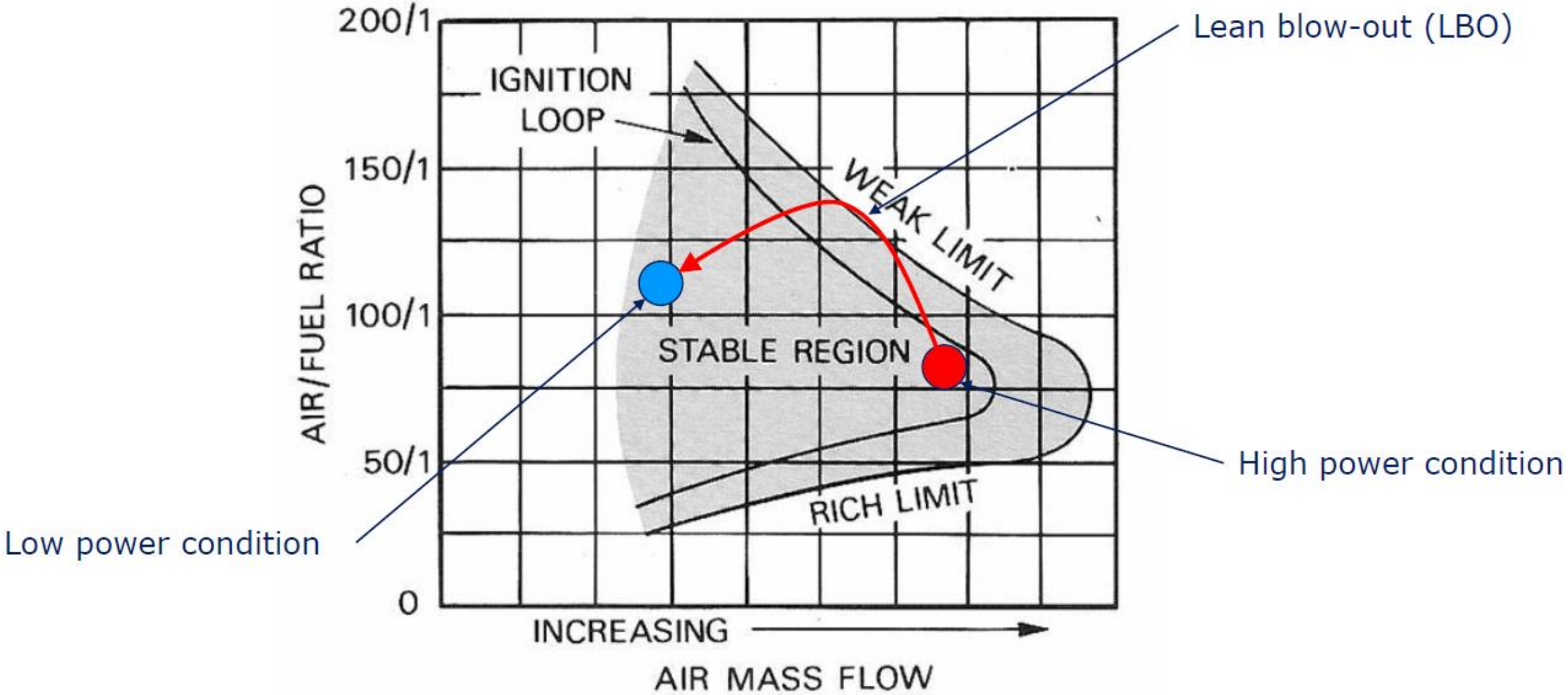

Feeding the turbine: 'temperature traverse'

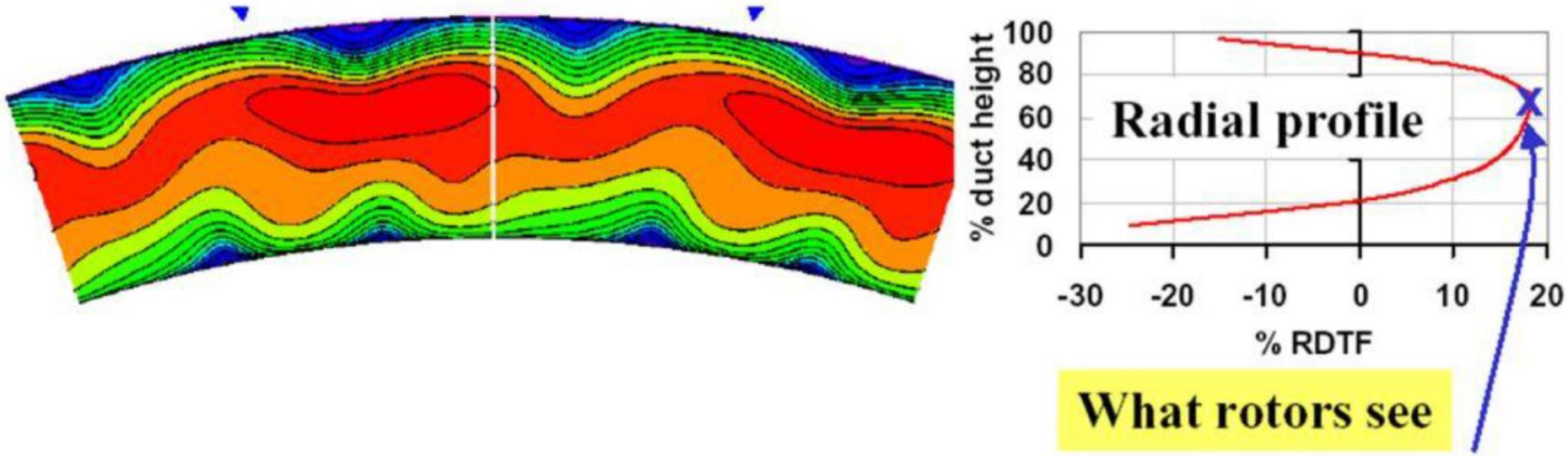

$$RTDF = \frac{T_{MAX\ CIRCUMFERENTIAL\ AVERAGE} - T_{INLET}}{T_{MEAN} - T_{INLET}}$$

- Right temperature distribution vital for life!
  - Overall temperature distribution factor for NGV's
  - Radial temperature distribution factor for rotors
- Use dilution air and rear cooling films to trim traverse

Ways of Cooling the Flame Tube

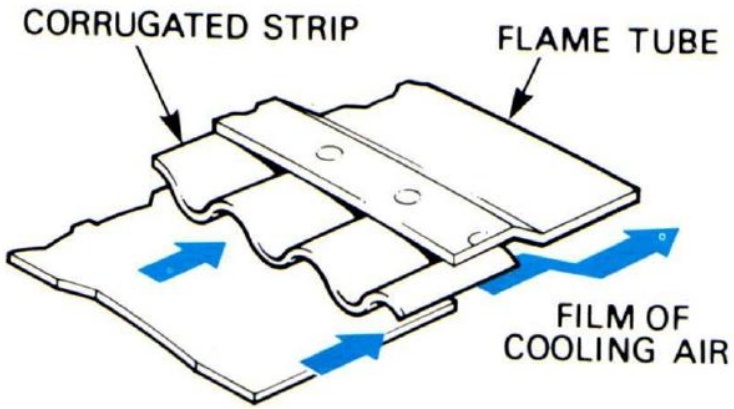

CORRUGATED STRIP COOLING

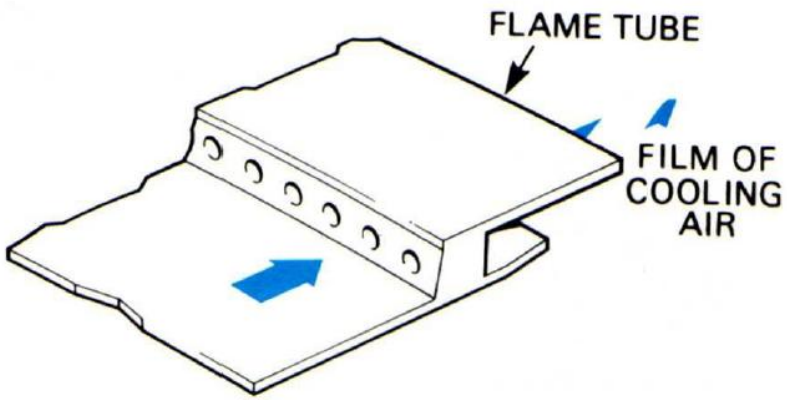

MACHINED COOLING RING

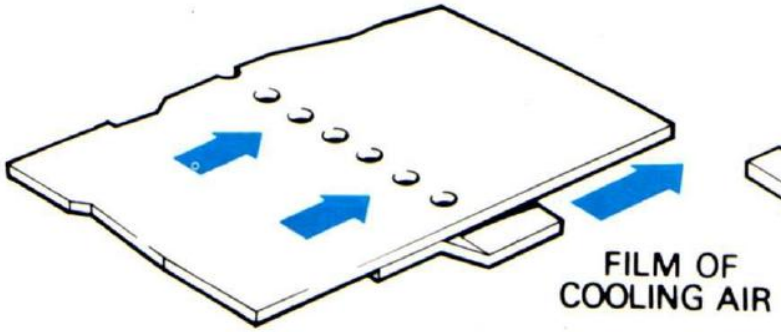

SPLASH COOLING STRIP

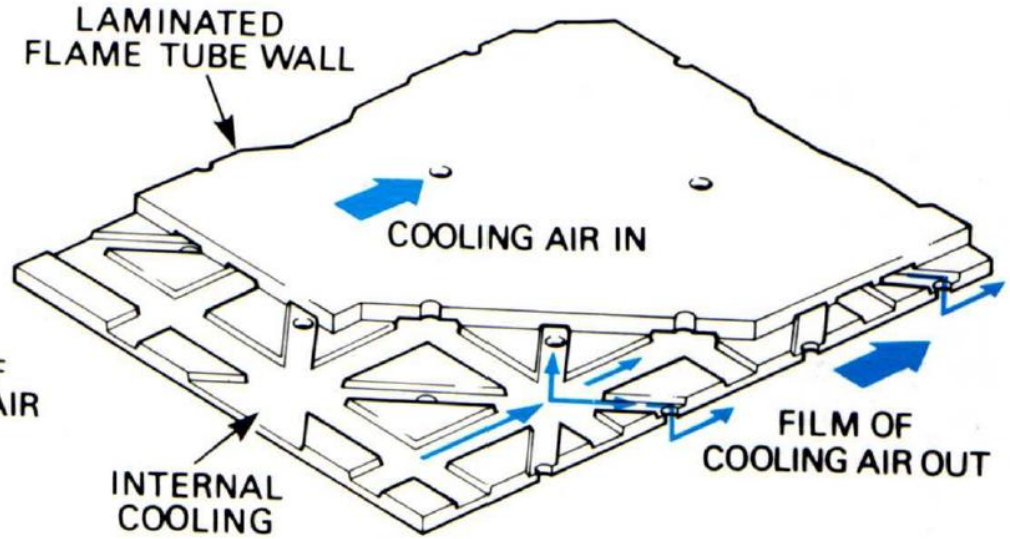

TRANSPIRATION COOLING

Reheat or Afterburner Systems

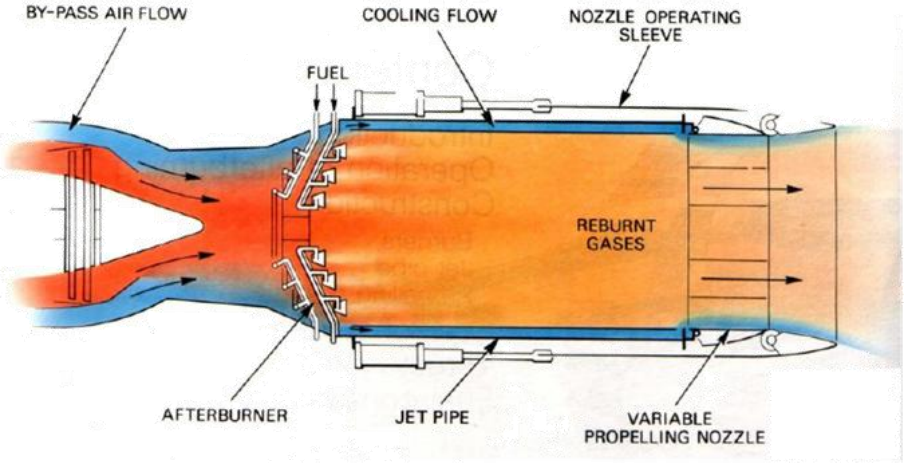

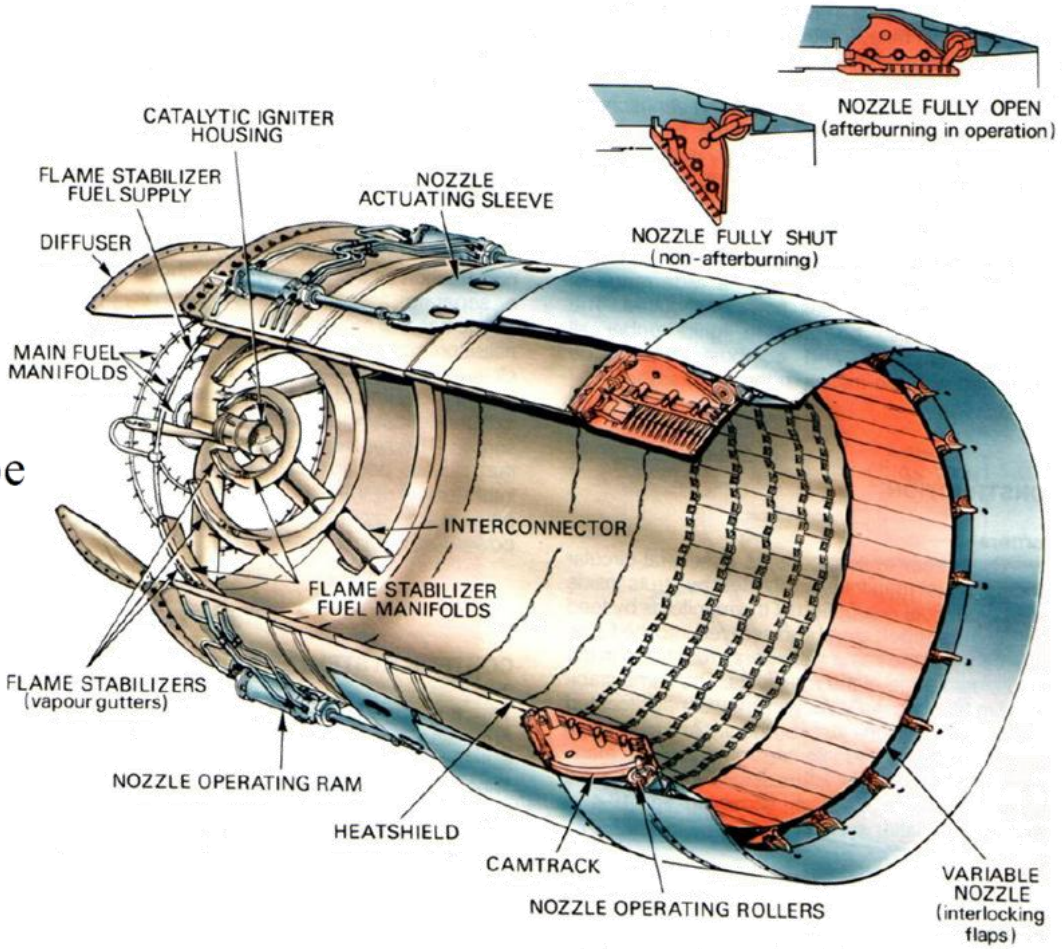

Requirements:

- Cool air to keep hot gases off the jet pipe
- Fuel injectors protected from hot gases
- Different fuel flow rates depending on gas temperature
- Sufficient length for stable operation
- Variable Area Nozzle